Powerware Series

Eaton® 5115 Tower UPS
500–1400 VA
User's Guide

Powering Business Worldwide

Class B EMC Statements

FCC Part 15

NOTE This equipment has been tested and found to comply with the limits for a Class B digital device, pursuant to part 15 of the FCC Rules. These limits are designed to provide reasonable protection against harmful interference in a residential installation. This equipment generates, uses and can radiate radio frequency energy and, if not installed and used in accordance with the instructions, may cause harmful interference to radio communications. However, there is no guarantee that interference will not occur in a particular installation. If this equipment does cause harmful interference to radio or television reception, which can be determined by turning the equipment off and on, the user is encouraged to try to correct the interference by one or more of the following measures:

- Reorient or relocate the receiving antenna.
- Increase the separation between the equipment and the receiver.
- Connect the equipment into an outlet on a circuit different from that to which the receiver is connected.
- Consult the dealer or an experienced radio/TV technician for help.

ICES-003

This Class B Interference Causing Equipment meets all requirements of the Canadian Interference Causing Equipment Regulations ICES-003.

Cet appareil numérique de la classe B respecte toutes les exigences du Reglement sur le matériel brouilleur du Canada.

Eaton, Powerware, and ABM are registered trademarks of Eaton Corporation or its subsidiaries and affiliates. National Electrical Code and NEC are registered trademarks of National Fire Protection Association, Inc. All other trademarks are property of their respective companies.

©Copyright 2000–2010 Eaton Corporation, Raleigh, NC, USA. All rights reserved. No part of this document may be reproduced in any way without the express written approval of Eaton Corporation.

Requesting a Declaration of Conformity

Units that are labeled with a CE mark comply with the following harmonized standards and EU directives:

- Harmonized Standards: EN 50091-1-1 and EN 50091-2; IEC 60950 Third Edition
- EU Directives: 73/23/EEC, Council Directive on equipment designed for use within certain voltage limits
  93/68/EEC, Amending Directive 73/23/EEC
  89/336/EEC, Council Directive relating to electromagnetic compatibility
  92/31/EEC, Amending Directive 89/336/EEC relating to EMC

The EC Declaration of Conformity is available upon request for products with a CE mark. For copies of the EC Declaration of Conformity, contact:

Eaton Corporation
Koskelontie 13
FIN-02920 Espoo
Finland
Phone: +358-9-452 661
Fax: +358-9-452 665 68

Special Symbols

The following are examples of symbols used on the UPS to alert you to important information:

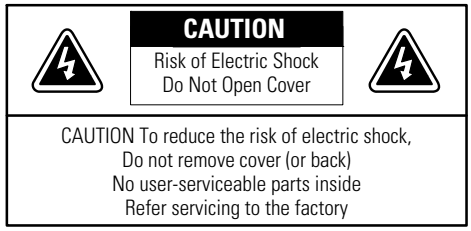

RISK OF ELECTRIC SHOCK - Observe the warning associated with the risk of electric shock symbol.

CAUTION: REFER TO OPERATOR'S MANUAL - Refer to your operator's manual for additional information, such as important operating and maintenance instructions.

SAFETY EARTHING TERMINAL - Indicates the primary safety ground.

LOAD ON/OFF - Press the button with this symbol to energize the output receptacles (~ indicator illuminates) or to de-energize the output receptacles (~ indicator is off).

RJ-45 RECEPTACLE - For 230V units only: this receptacle provides network interface connections. Do not plug telephone or telecommunications equipment into this receptacle.

This symbol indicates that you should not discard the UPS or the UPS batteries in the trash. The UPS may contain sealed, lead-acid batteries and must be disposed of properly. For more information, contact your local recycling/reuse or hazardous waste center.

Table of Contents

1 Introduction 1

2 Safety Warnings 3

3 Installation 21

Inspecting the Equipment 21
Connecting the UPS Internal Battery 22
Installing the UPS 24
UPS Rear Panels 26

4 Operation 31

Turning the UPS On 31
Starting the UPS on Battery 31
Turning the UPS Off 32
Standby Mode 32
UPS Front Panel 33
Initiating the Self-Test 33

5 Additional UPS Features 35

Voltage Configuration 35
Communication Options 36
USB Port 36
DB-9 Communication Port 37
Network Transient Protector 38

6 UPS Maintenance 39

UPS and Battery Care 39
Transporting the UPS 39
Storing the UPS and Batteries 40
Replacing Batteries 40
Testing New Batteries 45
Recycling the Used Battery or UPS 45

7 Specifications 47

8 Troubleshooting 51

Audible Alarms and UPS Conditions 51

Silencing an Audible Alarm 51

Site Wiring Fault (120V Models Only) 52

Service and Support 55

9 Warranty 57

Two-Year Limited Warranty with Extension to Three-Year Limited Warranty (US and Canada) 57

Load Protection Guarantee (US and Canada) 59

Chapter 1 Introduction

The Eaton® 5115 uninterruptible power system (UPS) protects your sensitive electronic equipment from basic power problems such as power failures, power sags, power surges, brownouts, and line noise.

Power outages can occur when you least expect it and power quality can be erratic. These power problems have the potential to corrupt critical data, destroy unsaved work sessions, and damage hardware — causing hours of lost productivity and expensive repairs.

With the Eaton 5115, you can safely eliminate the effects of power disturbances and guard the integrity of your equipment. The Eaton 5115's flexibility to handle an array of network devices makes it the perfect choice to protect your LANs, servers, workstations, and other electrical equipment.

Figure 1 shows the Eaton 5115 UPS.

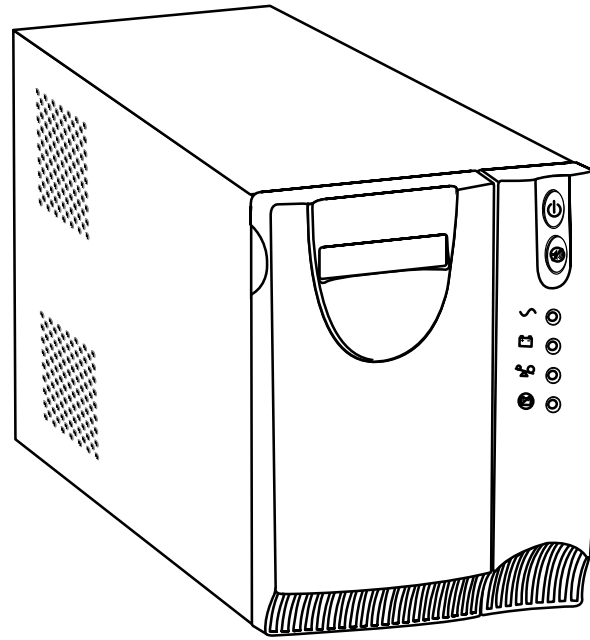

Figure 1. The Eaton 5115 UPS

Providing outstanding performance and reliability, the Eaton 5115's unique benefits include:

- Buck and Boost voltage regulation that ensures consistent voltage to your load by correcting voltage fluctuations.
- ABM® technology that uses advanced battery management to increase battery service life, optimize recharge time, and provide a warning before the end of useful battery life.
- Start-on-battery capability for powering up the UPS even if utility power is not available.
- Hot-swappable batteries that simplify maintenance by allowing you to replace batteries safely without powering down the critical load.
- Two standard communication options (USB and DB-9 serial port).
- Network transient protector that guards your network communications equipment from surges. Low voltage models can also protect modems, fax machines, or other telecommunications equipment.
- Advanced power management with the Software Suite CD for graceful shutdowns and power monitoring.
- Backed by worldwide agency approvals.

Chapter 2 Safety Warnings

IMPORTANT SAFETY INSTRUCTIONS
SAVE THESE INSTRUCTIONS

This manual contains important instructions that you should follow during installation and maintenance of the UPS and batteries. Please read all instructions before operating the equipment and save this manual for future reference.

DANGER

This UPS contains **LETHAL VOLTAGES**. All repairs and service must be performed by **AUTHORIZED SERVICE PERSONNEL ONLY**. There are **NO USER SERVICEABLE PARTS** inside the UPS.

WARNING

- This UPS contains its own energy source (batteries). The output receptacles may carry live voltage even when the UPS is not connected to an AC supply.
- For 220–240V models, the output receptacles may remain electrically live. If the input power source in your application is wired line-to-neutral (as in most European applications), the voltage to the output receptacles is 0V. With line-to-line input wiring, the voltage to the output receptacles is 110–120V (measured from line-to-ground or line-to-neutral, depending on the UPS wiring).
- Do not remove or unplug the input cord when the UPS is turned on. This removes the safety ground from the UPS and the equipment connected to the UPS.
- To reduce the risk of fire or electric shock, install this UPS in a temperature and humidity controlled, indoor environment, free of conductive contaminants. Ambient temperature must not exceed 40°C (104°F). Do not operate near water or excessive humidity (95% maximum).
- To comply with international standards and wiring regulations, the total equipment connected to the output of this UPS must not have an earth leakage current greater than 1.5 milliamperes.
- If the UPS requires any type of transportation, disconnect the internal UPS batteries before transporting (see page 39).

CAUTION

- The wall outlet must be within 2 meters of the equipment and accessible to the operator.
- Batteries can present a risk of electrical shock or burn from high short-circuit current. The following precautions must be observed: 1) Remove watches, rings, or other metal objects; 2) Use tools with insulated handles; 3) Do not lay tools or metal parts on top of batteries; 4) Disconnect charging source prior to connecting or disconnecting battery terminals.
- Proper disposal of batteries is required. Refer to your local codes for disposal requirements.
- Never dispose of batteries in a fire. Batteries may explode when exposed to flame.
- Do not open or mutilate the battery or batteries. Released electrolyte is harmful to the skin and eyes and may be extremely toxic.
- Replace batteries with the same number and type of batteries as originally installed in the UPS.

Sikkerhedsanvisninger

VIGTIGE SIKKERHEDSANVISNINGER GEM DISSE ANVISNINGER

Denne manual indeholder vigtige instruktioner, som skal følges under installation og vedligeholdelse af UPS'en og batterierne. Læs venligst alle instruktioner inden betjening af udstyret og gem denne manual mhp. fremtidige opslag.

FARE

Denne UPS indeholder LIVSFARLIG HØJSPÆNDING. Alle reparationer og vedligeholdelse bør kun udføres af en AUTORISERET SERVICETEKNIKER. Ingen af UPS'ens indvendige dele kan repareres af brugeren.

ADVARSEL!

- Denne UPS indeholder sin egen energikilde (batterier). Udgangsstikkene kan endog være strømførende, når UPS'en ikke er koblet til en vekselstrømsforsyning.
- På 220–240V-modeller kan udgangsstikkene være strømførende. Hvis ledningsføringen til indgangsstrømkilden på din enhed er fase-til-neutral (som på de fleste europæiske enheder), er spændingen til udgangsstikkene 0V. Med en fase-til-fase indgangsledningsføring er spændingen til udgangsstikkene 110–120V (målt fra fase-til-jord eller fase-til-neutral, afhængig af UPS-ledningsføringen).
- Netledningen må ikke fjernes og stikket må ikke trækkes ud, mens UPS'en er tændt. Dette fjerner sikkerhedsjorden fra UPS'en og fra det udstyr, der er sat til.

- Installér denne UPS i et temperatur- og fugtighedskontrolleret indendørsmiljø, frit for ledende forureningsstoffer for at formindske risikoen for brand og elektrisk stød. Rumtemperaturen må ikke overstige 40°C. UPS'en bør ikke betjenes nær vand eller høj fugtighed (maksimalt 95%).
- I overensstemmelse med internationale normer og bestemmelser for el-installation må det udstyr, der er forbundet til udgangen af denne UPS, tilsammen ikke overskride en jordafdelingsspænding på mere end 1,5 milliampere.

ADVARSEL

- Stikkontakten skal være højest 2 meter fra udstyret og skal være tilgængeligt til operatøren.
- Batterierne kan give risiko for elektrisk stød eller brandsår forårsaget af høj kortslutningsstrøm. Følgende forsigtighedsregler skal overholdes: 1) Tag ure, ringe eller andre metalgenstande af; 2) Anvend værktøj med isolerede håndtag; 3) Læg ikke værktøj eller metaldele ovenpå batterierne; 4) Frakobl ladningskilden inden til- eller frakobling af batteriklemmerne.
- Korrekt bortskaffelse af batterier er påkrævet. Overhold gældende lokale regler for bortskaffelsesprocedurer.
- Skaf dig aldrig af med batterierne ved at brænde dem. Batterierne kan eksplodere ved åben ild.
- Åbn eller ødelæg ikke batteriet eller batterierne. Udløst elektrolyt er skadeligt for hud og øjne og kan være yderst giftigt.
- Udskift batterierne med samme batterinummer og -type som de oprindeligt installerede i UPS'en.

Belangrijke Veiligheidsinstructies

BELANGRIJKE VEILIGHEIDSINSTRUCTIES BEWAAR DEZE INSTRUCTIES

Deze handleiding bevat belangrijke instructies die u dient te volgen tijdens de installatie en het onderhoud van de UPS en de accu's. Lees alle instructies voordat u de apparatuur in bedrijf neemt en bewaar deze handleiding als naslagwerk.

GEVAAR

Deze UPS bevat LEVENSGEVAARLIJKE ELEKTRISCHE SPANNING. Alle reparaties en onderhoud dienen UITSLUITEND DOOR ERKEND SERVICEPERSONEEL te worden uitgevoerd. Er bevinden zich GEEN ONDERDELEN in de UPS die DOOR DE GEBRUIKER kunnen worden GEREPAREERD.

WAARSCHUWING

- Deze UPS bevat een eigen energiebron (batterijen). De uitgangscontactdoos kan onder spanning staan, zelfs wanneer de UPS niet is aangesloten op de netspanning.
- Bij de modellen van 220–240V kan de uitgangscontactdoos onder spanning blijven staan. Als de bedrading van de ingangsspanningsbron in uw systeem loopt van fase naar aarde (zoals bij de meeste Europese systemen) dan bedraagt de spanning op de uitgangscontactdozen 0 V. Als de ingangsbedrading loopt van fase naar fase dan bedraagt de spanning op de uitgangscontactdozen 110–120V (gemeten tussen fase en aarde of tussen fase en neutraal, afhankelijk van de UPS-bedrading).
- Verwijder de ingangsnoer niet of haal de stekker van de ingangsnoer er niet uit terwijl de UPS aan staat. Hierdoor zou de UPS en uw aangesloten apparatuur geen aardebeveiliging meer hebben.
- Teneinde de kans op brand of elektrische schok te verminderen dient deze UPS in een gebouw met temperatuur- en vochtigheidregeling te worden geïnstalleerd, waar geen geleidende verontreinigingen aanwezig zijn. De omgevingstemperatuur mag 40°C niet overschrijden. Niet gebruiken in de buurt van water of bij zeer hoge vochtigheid (max. 95%).
- Om aan de internationale normen en bedradingsvoorschriften te voldoen mag de gehele apparatuur die op de uitgang van deze UPS is aangesloten, geen aardlekstroom van meer dan 1,5 milliampère hebben.

OPGELET

- De hoofdvoedingcontactdoos moet zich op minder dan 2 meter vande apparatuur bevinden en makkelijk bereikbaar zijn voor de gebruiker.
- Accu's leveren gevaar op voor elektrische schokken en kunnen brandwonden veroorzaken door een grote kortsluitstroom. De volgende voorzorgsmaatregelen dienen in acht te worden genomen: 1) Verwijder horloges, ringen en andere metalen voorwerpen; 2) Gebruik gereedschappen met geïsoleerde handgrepen; 3) Leg geen gereedschap of metalen onderdelen boven op de accu's; 4) Koppel de laadbron los voordat accupolen worden los- of vastgemaakt.
- De batterijen moeten op de juiste wijze worden opgeruimd. Raadpleeg hiervoor uw plaatselijke voorschriften.
- Nooit batterijen in het vuur gooien. De batterijen kunnen ontploffen.
- Maak nooit accu's open en zorg ervoor dat deze niet beschadigd raken. Vrijkomend elektrolyt is schadelijk voor de huid en ogen, en kan uiterst giftig zijn.
- Vervang de accu's door accu's met hetzelfde nummer en van hetzelfde type als de oorspronkelijke accu's in de UPS.

Tarkeita turvaohjeita

TÄRKEITÄ TURVAOHJEITA - SUOMI
SÄILYTÄ NÄMÄ OHJEET

Tämä käyttöohje sisältää tärkeitä ohjeita, joita on noudatettava UPS-virtalähteen ja akkujen asennuksen ja huollon yhteydessä. Lue kaikki ohjeet ennen laitteiston käyttöä ja säilytä ohje myöhempää tarvetta varten.

VAARA

Tämä UPS sisältää HENGENVAARALLISIA JÄNNITTEITÄ. Kaikki korjaukset ja huollot on jätettävä VAIN VALTUUTETUN HUOLTOHENKILÖN TOIMEKSI. UPS ei sisällä MITÄÄN KÄYTTÄJÄN HUOLLETTAVIA OSIA.

VAROITUS

- Tässä UPS-virtalähteessä on oma energianlähde (akut). Lähtövastakkeissa voi olla jännite, vaikka UPS-virtalähdettä ei ole kytketty verkkovirtaan.
- 220–240V -malleissa lähtövastakkeissa voi säilyä jännite. Jos sovelluksen tulovirtalähde on johdotettu linjasta neutraaliin (kuten useimmissa eurooppalaisissa sovelluksissa) lähtövastakkeiden jännite on 0 V. Linjasta linjaan –tulojohdotuksessa lähtövastakkeiden jännite on 110–120V (mitataan linjasta maahan tai linjasta neutraaliin, UPS-virtalähteen johdotuksesta riippuen).
- Älä poista tai irrota sisääntulojohtoa, kun UPS on kytkettynä. Tämä poistaa turvamaadoituksen UPS-laitteesta ja siihen liitetystä laitteistosta.
- Vähentääksesi tulipalon ja sähköiskun vaaraa asenna tämä UPS sisätiloihin, joissa lämpötila ja kosteus on säädettävissä ja joissa ei ole virtaa johtavia epäpuhtauksia. Ympäristön lämpötila ei saa ylittää 40 °C. Älä käytä lähellä vettä ja vältä kosteita tiloja (95 % maksimi).
- Kansainväliset normit ja johdotusmääräykset vaativat, että kaikkien tämän UPS-laitteen ulostulokytkentöjen yhteinen maavuotovirta ei ylitä 1,5 milliampeeria (mA).

VARO

- Päävirtapistokkeen täytyy olla 2 m:n säteellä laitteistosta ja käyttäjän saatavilla. UPS-laitteen virtakytkin ei eristä sisäosia virran saannilta.
- Akut voivat aiheuttaa sähköiskun tai palovammojen vaaran johtuen suuresta oikosulkuvirrasta. Seuraavia varotoimia on noudatettava: 1) Riisu kellot, sormukset tai muut metalliesineet. 2) Käytä työkaluja, joissa on eristetyt kädensijat. 3) Älä aseta työkaluja tai metalliosia akkujen päälle. 4) Irrota latauslähde ennen akun napojen kytkemistä tai irrotusta.
- Akusto täytyy hävittää säädösten mukaisella tavalla. Noudata paikallisia määräyksiä.

- Älä koskaan heitä akkuja tuleen. Ne voivat räjähtää.
- Älä avaa tai vaurioita akkua tai akkuja. Paljastunut elektrolyytti on vahingollinen iholle ja silmille ja voi olla erittäin myrkyllistä.
- Vaihda UPS-virtalähteeseen vain samanlaiset akut ja sama määrä akkuja kuin siinä oli alun perin.

Consignes de sécurité

CONSIGNES DE SÉCURITÉ IMPORTANTES CONSERVER CES INSTRUCTIONS

Ce manuel comporte des instructions importantes que vous êtes invité à suivre lors de toute procédure d'installation et de maintenance des batteries et de l'onduleur. Veuillez consulter entièrement ces instructions avant de faire fonctionner l'équipement et conserver ce manuel afin de pouvoir vous y reporter ultérieurement.

DANGER!

Cet onduleur contient des TENSIONS MORTELLES. Toute opération d'entretien et de réparation doit être EXCLUSIVEMENT CONFIÉE A UN PERSONNEL QUALIFIÉ AGRÉÉ. AUCUNE PIÈCE RÉPARABLE PAR L'UTILISATEUR ne se trouve dans l'onduleur.

AVERTISSEMENT!

- Cet onduleur possède sa propre source d'alimentation (batteries). Il est possible que les prises de sortie soient sous tension même lorsque l'onduleur n'est pas connectée à une alimentation CA.
- En ce qui concerne les modèles 220–240 V, il est possible que les prises de sortie restent sous tension. Si la source d'alimentation de votre application est câblée phase et neutre (comme dans la majorité des applications européennes), la tension vers les prises de sortie est de 0 V. Avec un câblage d'entrée phase à phase, la tension vers les prises de sortie est de 110–120 V (mesurée entre phase et terre ou phase et neutre suivant le câblage de l'onduleur).
- Ne pas retirer le cordon d'alimentation lorsque l'onduleur est sous tension sous peine de supprimer la mise à la terre de l'onduleur et du matériel connecté.
- Pour réduire les risques d'incendie et de décharge électrique, installer l'onduleur uniquement à l'intérieur, dans un lieu dépourvu de matériaux conducteurs, où la température et l'humidité ambiantes sont contrôlées. La température ambiante ne doit pas dépasser 40 °C. Ne pas utiliser à proximité d'eau ou dans une atmosphère excessivement humide (95 % maximum).

- Afin d'être conforme aux normes et règlements internationaux de câblage, le courant de fuite à la terre de la totalité du matériel branché sur la sortie de l'onduleur ne doit pas dépasser 1,5 mA.

ATTENTION!

- La prise principale secteur doit se trouver à moins de 2 mètres du matériel et être accessible à l'utilisateur.
- Les batteries peuvent présenter un risque de choc électrique ou de brûlure provenant d'un courant de court-circuit haute intensité. Les précautions suivantes doivent être observées : 1) Retirez montre, bagues ou autres objets métalliques ; 2) Utilisez des outils aux poignées isolantes ; 3) Ne déposez pas d'outils ou de pièces métalliques sur les batteries ; 4) Déconnectez la source de chargement avant de connecter ou de déconnecter les bornes de batterie.
- Une mise au rebut réglementaire des batteries est obligatoire. Consulter les règlements en vigueur dans votre localité.
- Ne jamais jeter les batteries au feu. L'exposition aux flammes risque de les faire exploser.
- Vous ne devez en aucun cas ni ouvrir ni détruire la ou les batteries. L'électrolyte qui s'en échappe est nuisible à la peau et aux yeux et peut s'avérer extrêmement toxique.
- Remplacez les batteries par des batteries du même type et numéro que celles installées à l'origine sur l'onduleur.

Sicherheitswarnungen

WICHTIGE SICHERHEITSANWEISUNGEN AUFBEWAREN

Dieses Handbuch enthält wichtige Anweisungen, die Sie während der Installation und Wartung des USV (Unterbrechungsfreies Stromversorgungssystem) und der Batterien befolgen müssen. Bitte lesen Sie alle Anweisungen des Handbuches bevor Sie mit dem Gerät arbeiten. Bewahren Sie das Handbuch zum Nachlesen auf.

WARNUNG

Die USV führt lebensgefährliche Spannungen. Alle Reparatur- und Wartungsarbeiten sollten nur von Kundendienstfachleuten durchgeführt werden. Die USV enthält keine vom Benutzer zu wartenden Komponenten.

ACHTUNG

- Diese USV (Unterbrechungsfreies Stromversorgung) enthält eine eigene Energiequelle (Batterien). Die Ausgangssteckdosen können Spannung führen, auch wenn die USV nicht an eine Wechselstromquelle angeschlossen ist.
- Bei Modellen mit 220–240 Volt können die Ausgangssteckverbinder stromführend bleiben. Wenn die Eingangsstromquelle in Ihrer Anlage mit Masseleitung verkabelt ist (wie in den meisten europäischen Anlagen), beträgt die Spannung an den Ausgangssteckverbindern 0 Volt. Bei einer Verkabelung mit Außenleitern beträgt die Spannung an den Ausgangssteckverbindern 110–120 Volt (gemessen von Leitung zu Masse oder Leitung zu Masseleiter, abhängig von der USV-Verkabelung.
- Das Eingangskabel nicht entfernen oder abziehen, während die USV eingeschaltet ist, weil hierdurch die Sicherheitserdung von der USV und den daran angeschlossenen Geräten entfernt wird.
- Um die Brand- oder Elektroschockgefahr zu verringern, diese USV nur in Gebäuden mit kontrollierter Temperatur und Luftfeuchtigkeit installieren, in denen keine leitenden Schmutzstoffe vorhanden sind. Die Umgebungstemperatur darf 40°C nicht übersteigen. Die USV nicht in der Nähe von Wasser oder in extrem hoher Luftfeuchtigkeit (max. 95 %) betreiben.
- Um internationale Normen und Verdrahtungsvorschriften zu erfüllen, dürfen die an den Ausgang dieser USV angeschlossenen Geräte zusammen einen Erdableitstrom von insgesamt 1,5 Milliampere nicht überschreiten.

VORSICHT!

- Die Steckdose in der Wand muss sich in einer Entfernung von höchstens 2 Metern zur Ausrüstung befinden und für den Betreiber zugänglich sein.
- Batterien können das Risiko eines elektrischen Schlags bergen oder durch hohen Kurzschlussstrom in Brand geraten. Folgende Vorsichtsmaßnahmen müssen beachtet werden: 1) Uhren, Ringe und andere Metallobjekte entfernen; 2) Werkzeuge mit isolierten Griffen verwenden; 3) Keine Werkzeuge oder Metallteile auf die Batterien legen; 4) Vor dem An- oder Abklemmen der Batterieanschlüsse die Ladequelle abklemmen.
- Ordnungsgemäße Entsorgung der Akkus ist erforderlich. Lesen Sie hierfür Ihre örtlichen Entsorgungsbestimmungen.
- Die Akkus nicht in einem Feuer entsorgen. In Feuer können Akkus explodieren.
- Die Batterie(n) nicht öffnen oder baulich verändern. Ausfließendes Elektrolyt ist schädlich für Haut und Augen.
- Falls Sie die Batterien austauschen, verwenden Sie bitte ausschließlich die gleiche Anzahl und die Batterietypen.

Avvisi di sicurezza

IMPORTANTI ISTRUZIONI DI SICUREZZA CONSERVARE QUESTE ISTRUZIONI

Il presente manuale contiene importanti istruzioni da seguire durante l'installazione e la manutenzione dell'UPS e delle batterie. Leggere integralmente le istruzioni prima di utilizzare l'apparecchiatura e conservare il presente manuale per futuro riferimento.

PERICOLO

La TENSIONE contenuta in questo gruppo statico di continuità è LETALE. Tutte le operazioni di riparazione e di manutenzione devono essere effettuate ESCLUSIVAMENTE DA PERSONALE TECNICO AUTORIZZATO. All'interno del gruppo statico di continuità NON vi sono PARTI RIPARABILI DALL'UTENTE.

AVVERTENZA

- L'UPS contiene la propria fonte di energia (batterie). Le prese d'uscita possono essere sotto tensione anche quando l'UPS non è collegato all'alimentazione elettrica CA.
- Nei modelli da 220–240 V è possibile che le prese d'uscita rimangano sotto tensione. Se la fonte di alimentazione in entrata dell'installazione è costituita da un collegamento linea-neutro (come accade nella maggior parte delle installazioni europee), la tensione delle prese d'uscita è pari a 0 V. Con un cablaggio in entrata del tipo linea-linea, la tensione sulle prese d'uscita è 115 V (con misurazione effettuata da linea a terra o da linea a neutro in base al cablaggio dell'UPS).
- Non rimuovere nè scollegare il cavo di ingresso quando il gruppo statico di continuità è acceso poichè in tal modo si disattiverebbe il collegamento a terra di sicurezza del gruppo statico di continuità e dell'apparecchiatura ad esso collegata.
- Per ridurre il rischio di incendio o di scossa elettrica, installare il gruppo statico di continuità in un ambiente interno a temperatura ed umidità controllata, privo di agenti contaminanti conduttivi. La temperatura ambiente non deve superare i 40°C. Non utilizzare l'unità in prossimità di acqua o in presenza di umidità eccessiva (95% max).
- Per conformità con gli standard internazionali e con le norme in merito al cablaggio, tutta l'apparecchiatura collegata con l'uscita del gruppo statico di continuità non deve avere una corrente di dispersione di terra superiore a 1,5 milliampere.

ATTENZIONE

- La presa di alimentazione principale non deve trovarsi a oltre 2 metri dall'apparecchiatura e deve essere accessibile all'operatore.
- Le batterie possono comportare un rischio di scossa elettrica o di ustione in seguito a un'elevata corrente di corto circuito. Si devono osservare le seguenti precauzioni: 1) rimuovere orologi, anelli o altri oggetti di metallo; 2) usare strumenti con manici isolanti; 3) non posare strumenti o parti metalliche sulle batterie; prima di collegare o scollegare i morsetti della batteria, scollegare la fonte di carica.
- Le batterie devono essere smaltite in modo corretto. Per i requisiti di smaltimento fare riferimento alle disposizioni locali.
- Non gettare mai le batterie nel fuoco poichè potrebbero esplodere se esposte alle fiamme.
- Non aprire o danneggiare la batteria o le batterie poichè l'elettrolita da esse rilasciato è nocivo alla cute e agli occhi e può essere altamente tossico.
- Sostituire le batterie con altre dello stesso numero e tipo di quelle originariamente installate nell'UPS.

Viktig Sikkerhetsinformasion

VIKTIGE SIKKERHETSINSTRUKSJONER GJEM DISSE INSTRUKSJONENE

Denne håndboken inneholder viktige instruksjoner som du bør overholde ved montering og vedlikehold av UPS-enheten og batteriene. Les alle instruksjoner før utstyret tas i bruk, og gjem håndboken til fremtidig referanse.

FARLIG

Denne UPS'en inneholder LIVSFARLIGE SPENNINGER. All reparasjon og service må kun utføres av AUTORISERT SERVICEPERSONALE. BRUKERE KAN IKKE UTFØRE SERVICE PÅ NOEN AV DELENE i UPS'en.

FARLIG

- UPS-enheten inneholder sin egen energikilde (batterier). Utgangsstikkene kan være strømførende selv når UPS-enheten ikke er koblet til et strømuttak.
- Utgangsstikkene kan være strømførende for 220–240V modellene. Spenningen til utgangsstikkene vil være 0 V dersom din enhets strømkilde er fase-til-nøytral (som på de fleste europeiske enheter). Med ledningsført fase-til-fase inngang vil spenningen til utgangsstikkene være 110–120V (målt fra fase-til-jord eller fase-til-nøytral, avhenging av UPS-ledningsføringen).

- Strømforsyningskabelen må ikke fjernes eller trekkes ut når UPS'en er på, slik at ikke sikkerhetsjordingen fjernes fra UPS'en og det utstyret som er forbundet med den.
- For å redusere fare for brann eller elektriske støt, bør denne UPS'en installeres i et innendørs miljø med kontrollert temperatur og luftfuktighet som er fritt for ledende, forurensende stoffer. Romtemperaturen må ikke overskride 40°C. Den må ikke brukes i nærheten av vann eller ved meget høy luftfuktighet (95% maks.).
- Alt utstyr som er forbundet med utgangen av denne UPS'en må ikke ha en sterkere total lekkasjestrøm enn 1,5 milliampere for å være i overensstemmelse med internasjonale standarder og forkablingsbestemmelser.

FORSIKTIG

- Stikkontakten må befinne seg innen 2 m fra utstyret og må være tilgjengelig for operatøren.
- Batterier kan utgjøre en fare for elektrisk støt eller brannsår pga. høy kortsluttingsstrøm. Følgende forholdsregler bør observeres: 1) Ta av klokker, ringer og andre metallobjekter, 2) Bruk verktøy med isolerte håndtak, 3) Legg ikke verktøy eller metalldeler på batterier, 4) Koble fra oppladningskilder før du til- eller frakobler batterikontakter.
- Batterier må fjernes på korrekt måte. Se lokale forskrifter vedrørende krav om fjerning av batterier.
- Kast aldri batterier i flammer, da de kan eksplodere, hvis de utsettes for åpen ild.
- Et batteri eller batterier må ikke åpnes eller ødelegges. Frigjorte elektrolytter er skadelige for hud og øyne og kan være ekstremt giftige.
- Skift ut originalbatteriene i UPS-enheten med samme antall og type.

Regulamentos de Segurança

INSTRUÇÕES DE SEGURANÇA IMPORTANTES GUARDE ESTAS INSTRUÇÕES

Este manual contém instruções importantes que devem ser seguidas durante a instalação e manutenção do no-break e das baterias. Leia todas as instruções antes de operar o equipamento e guarde este manual para consultá-lo futuramente.

CUIDADO

A UPS contém VOLTAGEM MORTAL. Todos os reparos e assistência técnica devem ser executados SOMENTE POR PESSOAL DA ASSISTÊNCIA TÉCNICA AUTORIZADO. Não há nenhuma PEÇA QUE POSSA SER REPARADA PELO USUÁRIO dentro da UPS.

ADVERTÊNCIA

- Este no-break possui sua própria fonte de energia (baterias). As tomadas de saída podem estar energizadas mesmo que o no-break não esteja conectado a uma fonte de energia elétrica.
- Nos modelos 220–240V, pode ser que as tomadas de saída permaneçam energizadas. Se a alimentação da sua aplicação for do tipo fase-neutro (como ocorre na maioria das aplicações na Europa), a tensão das tomadas de saída é de 0 V. Com a alimentação fase-fase, a tensão das tomadas de saída é de 110–120V (medida como fase-terra ou fase-neutro, dependendo da instalação elétrica do no-break).
- Não remova ou desconecte o cabo de entrada quando a UPS estiver ligada. Isto removerá o aterramento de segurança da UPS e do equipamento conectado.
- Para reduzir o risco de incêndios ou choques elétricos, instale a UPS em ambiente interno com temperatura e umidade controladas e livres de contaminadores condutíveis. A temperatura ambiente não deve exceder 40°C. Não opere próximo a água ou em umidade excessiva (máx: 95%).
- Para estar de acordo com os padrões internacionais e os regulamentos de fiação, o equipamento total conectado à saída desta UPS não deve ter uma corrente de fuga à terra maior que 1,5 miliampères.

PERIGO

- O soquete de alimentação principal deve estar à no máximo dois metros do equipamento e acessível ao operador.
- As baterias podem oferecer risco de choque elétrico ou queimadura, ocasionados por alta tensão com possibilidade de curto circuito. Devem ser tomadas as seguintes precauções: 1) Retire relógios, anéis ou outros objetos metálicos; 2) Utilize ferramentas com cabo isolado; 3) Não coloque ferramentas ou peças metálicas sobre as baterias; 4) Desconecte a fonte de carga de energia antes de conectar ou desconectar os terminais da bateria.
- Siga as instruções apropriadas ao desfazer-se das baterias. Consulte os códigos do local para maiores informações sobre os regulamentos de descarte de produtos.
- Nunca jogue as baterias no fogo, porque há risco de explosão.
- Não abra nem danifique a(s) bateria(s). O eletrólito liberado é prejudicial à pele e aos olhos e pode ser extremamente tóxico.
- Ao realizar a troca das baterias, utilize a mesma quantidade e o mesmo tipo de bateria instalada originalmente no no-break.

Меры безопасности

ВАЖНЫЕ УКАЗАНИЯ ПО МЕРАМ БЕЗОПАСНОСТИ СОХРАНИТЕ ЭТИ УКАЗАНИЯ

В данном руководстве содержатся важные инструкции по установке и обслуживанию источника бесперебойного питания (ИБП) и батарей. Перед работой с оборудованием прочтите все инструкции. Сохраните данное руководство для дальнейшего использования.

ОПАСНО

В данном ИБП имеются СМЕРТЕЛЬНО ОПАСНЫЕ НАПРЯЖЕНИЯ. Все работы по ремонту и обслуживанию должны выполняться ТОЛЬКО УПОЛНОМОЧЕННЫМ ОБСЛУЖИВАЮЩИМ ПЕРСОНАЛОМ. Внутри ИБП нет узлов, ОБСЛУЖИВАЕМЫХ ПОЛЬЗОВАТЕЛЕМ.

ПРЕДУПРЕЖДЕНИЕ

- В данном ИБП установлены собственные источники энергии (батареи). На выходных розетках может быть напряжение, даже если ИБП не подключен к сети переменного тока.
- На выходных розетках моделей с напряжением 220-240 В может быть напряжение. Если устройство рассчитано на тип подключения “фаза-нейтраль” (как большинство устройств, изготавливаемых в Европе), напряжение на выходных розетках равно 0 В. При типе подключения “фаза-фаза” напряжение на выходных розетках составляет 110-120 В (при измерении “фаза-земля” или “фаза-нейтраль”, в зависимости от электрической схемы ИБП).
- Не отсоединяйте сетевой шнур и не извлекайте его вилку из розетки при включенном ИБП. При этом защитное заземление отключается от ИБП и от оборудования, подключенного к ИПБ.
- Для снижения опасности пожара или поражения электрическим током устанавливайте ИБП в закрытом помещении с контролируемыми температурой и влажностью, в котором отсутствуют проводящие загрязняющие вещества. Температура окружающего воздуха не должна превышать 40°C. Не эксплуатируйте устройство около воды или в местах с повышенной влажностью (макс. 95%).
- Для обеспечения соблюдения требований международных стандартов и требований к разводке электрических цепей, суммарная величина тока утечки на землю всего оборудования, подключенного к выходу ИБП, не должна превышать 1,5 миллиампера.

ОСТОРОЖНО

- Устанавливайте устройство не дальше двух метров от розетки электропитания. К ней следует обеспечить свободный доступ.
- Высокое напряжение, вызванное коротким замыканием в батарее, может привести к поражению электрическим током или ожогу. Соблюдайте следующие меры предосторожности: 1) снимите часы, кольца и другие металлические предметы; 2) используйте инструменты с изолированными ручками; 3) не кладите инструменты или другие металлические предметы на батареи; 4) перед подключением или отключением батарей отключите электропитание.
- Необходимо соблюдать правила утилизации аккумуляторов. Обратитесь к местным нормативным актам за информацией о требованиях к утилизации.
- Никогда не бросайте батареи в огонь. Батареи могут взорваться под воздействием огня.
- Не допускайте вскрытия или повреждения батарей. Вытекший электролит опасен для кожи и глаз и высокотоксичен.
- Заменяйте батареи ИБП только таким же количеством батарей аналогичного типа.

Advertencias de Seguridad

INSTRUCCIONES DE SEGURIDAD IMPORTANTES GUARDE ESTAS INSTRUCCIONES

Este manual contiene instrucciones importantes que debe seguir durante la instalación y el mantenimiento del SAI y de las baterías. Por favor, lea todas las instrucciones antes de poner en funcionamiento el equipo y guarde este manual para referencia en el futuro.

PELIGRO

Este SAI contiene VOLTAJES MORTALES. Todas las reparaciones y el servicio técnico deben ser efectuados SOLAMENTE POR PERSONAL DE SERVICIO TÉCNICO AUTORIZADO. No hay NINGUNA PARTE QUE EL USUARIO PUEDA REPARAR dentro del SAI.

ADVERTENCIA

- Este SAI contiene su propia fuente de energía (baterías). Los receptáculos de salida pueden transportar voltaje activo aun cuando el SAI no esté conectado con una fuente de CA.
- Para los modelos 220–240V, es posible que los receptáculos de salida permanezcan eléctricamente activos. Si la fuente de energía de entrada de su aplicación está cableada de línea a neutro (como la mayoría de las aplicaciones europeas), el voltaje a los receptáculos de salida es 0V. Con cableado de entrada de línea a línea, el voltaje hacia los receptáculos de salida es 110–120V (medido de línea a tierra o de línea a neutro, lo que dependerá del cableado del SAI).
- No retire o desenchufe el cable de entrada mientras el SAI se encuentre encendido. Esto suprime la descarga a tierra de seguridad del SAI y de los equipos conectados al SAI.
- Para reducir el riesgo de incendio o de choque eléctrico, instale este SAI en un lugar cubierto, con temperatura y humedad controladas, libre de contaminantes conductores. La temperatura ambiente no debe exceder los 40°C. No trabaje cerca del agua o con humedad excesiva (95% máximo).
- Para cumplir con los estándares internacionales y las normas de instalación, la totalidad de los equipos conectados a la salida de este SAI no debe tener una intensidad de pérdida a tierra superior a los 1,5 miliamperios.

PRECAUCIÓN

- El tomacorriente de pared debe encontrarse dentro de los 2 metros de distancia del equipo y ser accesible para el operador.
- Las baterías pueden constituir un riesgo de descarga eléctrica o quemaduras por corriente alta de corto circuito. Debe tomar las siguientes precauciones: 1) Quítese el reloj, los anillos u otros objetos de metal; 2) Utilice herramientas con manijas aisladas; 3) No coloque las herramientas o piezas de metal en la parte superior de las baterías; 4) Desconecte la fuente de carga antes de conectar o desconectar las terminales de las baterías.
- Es necesario desechar las baterías de un modo adecuado. Consulte las normas locales para conocer los requisitos pertinentes.
- Nunca deseche las baterías en el fuego. Las baterías pueden explotar si se las expone a la llama.
- No abra ni corte las baterías. El electrolito liberado es peligroso para la piel y los ojos, y puede ser extremadamente tóxico.
- Reemplace las baterías con el mismo número y tipo de baterías como se instalaron originalmente en el SAI.

Säkerhetsföreskrifter

VIKTIGA SÄKERHETSFÖRESKRIFTER
SPARA DESSA FÖRESKRIFTER

Den här anvisningen innehåller viktiga instruktioner som du ska följa under installation och underhåll av UPS-enheten och batterierna. Läs alla instruktioner innan du använder utrustningen och spara den här anvisningen för framtida referens.

FARA

Denna UPS-enhet innehåller LIVSFARLIG SPÄNNING. ENDAST AUKTORISERAD SERVICEPERSONAL får utföra reparationer eller service. Det finns inga delar som ANVÄNDAREN KAN UTFÖRA SERVICE PÅ inuti UPS-enheten.

VARNING

- Den här UPS-enheten innehåller sin egen energikälla (batterier). Uttagen kan vara spänningsförande även då UPS-enheten inte är ansluten till spänningsnätet.
- På modellerna 220 – 240 V kan de utgående uttagen fortfarande vara strömförande. Om den ingående strömkällan i din applikation är kopplad ledare-till-nolla (det vanligaste i Europa) är spänningen till de utgående uttagen 0 V. Är den ingående strömkällan kopplad ledare-till-ledare är spänningen i de utgående uttagen 110 – 120 V (uppmätt från ledare-till-jord eller ledare-till-nolla beroende på UPS:ens anslutning).
- Ta aldrig bort nätsladden när UPS-enheten är påslagen. Detta tar bort skyddsjordningen från både UPS-enheten och den anslutna utrustningen.
- Minska risken för brand eller elektriska stötar genom att installera denna UPS-enhet inomhus, där temperatur och luftfuktighet är kontrollerade och där inga ledande föroreningar förekommer. Omgivande temperatur får ej överstiga 40 °C. Använd inte utrustningen nära vatten eller vid hög luftfuktighet (max 95 %).
- För att överensstämma med internationell standard och installationsföreskrifter får inte den totala utrustning som anslutits till uttagen på denna UPS-enhet ha läcksström som överstiger 1,5 milliampere.

VIKTIGT

- Huvudkontakten måste vara högst 2 meter från utrustningen och inom räckhåll för användaren.
- Batterierna kan innebära en risk för elektrisk stöt eller brännskada från kortsluten starkström. Följande försiktighetsåtgärder skall iakttagas: 1) Ta av klockor, ringar och andra metallobjekt. 2) Använd verktyg med isolerade grepp. 3) Lägg inte verktyg eller metalldelar ovanpå batterierna. 4) Koppla bort laddningskällan före anslutning eller bortkoppling av batteripolerna.

- Batterierna måste avyttras enligt anvisningarna i lokal lagstiftning.
- Använda batterier får aldrig brännas upp. De kan explodera.
- Öppna eller förstör inte batteriet eller batterierna. Utsläppt elektrolyt är skadlig för hud och ögon och kan vara mycket giftig.
- Byt ut batterierna mot samma antal och typer av batterier som ursprungligen installerats i UPS-enheten.

Chapter 3 Installation

This section explains:

- Equipment inspection
- UPS internal battery connection
- UPS installation
- UPS rear panels

Inspecting the Equipment

If any equipment has been damaged during shipment, keep the shipping cartons and packing materials for the carrier or place of purchase and file a claim for shipping damage. If you discover damage after acceptance, file a claim for concealed damage.

To file a claim for shipping damage or concealed damage: 1) File with the carrier within 15 days of receipt of the equipment; 2) Send a copy of the damage claim within 15 days to your service representative.

NOTE *Check the battery recharge date on the shipping carton label. If the date has expired and the batteries were never recharged, do not use the UPS. Contact your service representative.*

Connecting the UPS Internal Battery

To ensure proper battery operation:

1. Verify that the UPS is off and unplugged.
2. Pull the top left corner forward and remove the UPS front cover (see Figure 2).

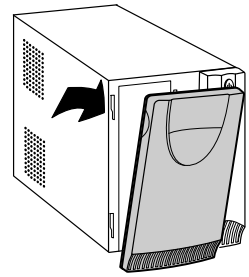

Figure 2. Removing the UPS Front Cover

3. Slide up and remove the metal battery cover (see Figure 3).

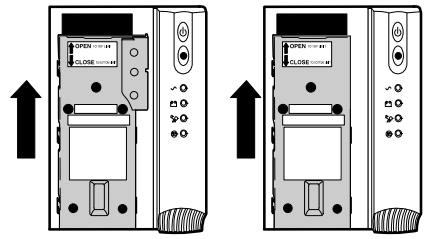

500–1000 VA 1400 VA

Figure 3. Removing the Battery Cover

4. Remove the protective label from the internal battery connector (see Figure 4).

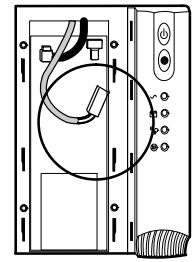

Figure 4. Removing the Protective Label

NOTE *A small amount of arcing may occur when connecting the batteries. This is normal and does not damage the unit or present any safety concern.*

5. Connect the red wire to the (+) battery connector (see Figure 5).

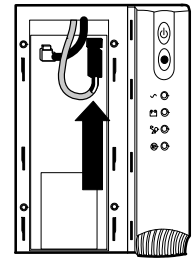

Figure 5. Connecting the Internal Battery Connector

6. Replace the metal battery cover.

7. Replace the UPS front cover.

Installing the UPS

NOTE *Do not make unauthorized changes to the UPS or accessories; otherwise, damage may occur to your equipment and void your warranty.*

Figure 6 shows a typical installation only. See "UPS Rear Panels" on page 26 for the rear panel of each model.

To install the UPS:

1. Verify that the DIP switch is set to the correct output voltage and input voltage range (see Table 1 on page 36).
2. If you plan to use power management software, connect your computer to the USB port or UPS communication port using the supplied cable. For more information about communication options, see page 36.
3. **For 230V models only.** Plug the detachable power cord into the input connector on the UPS rear panel.
4. Plug the UPS power cord into a power outlet.

   Verify that the circuit has an upstream overcurrent protection of 15A for 120V models or 10A for 230V models.

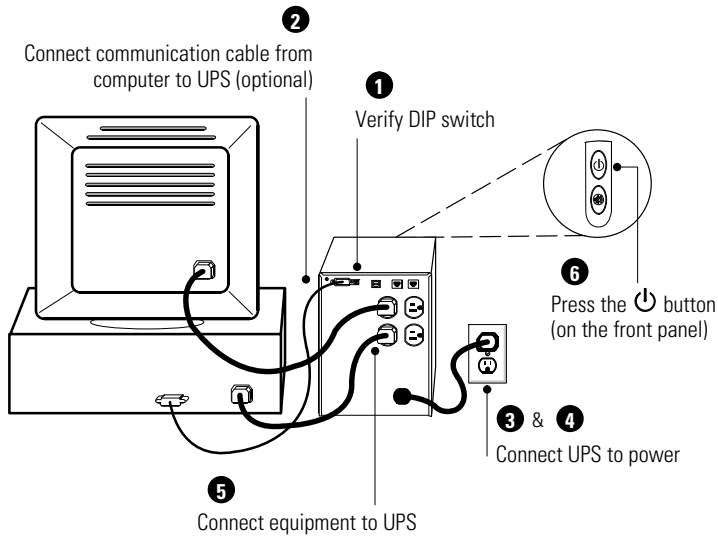

Figure 6. Typical UPS Installation (120V Model Shown)

5. Plug the equipment to be protected into the UPS output receptacles.

NOTE *DO NOT protect laser printers with the UPS because of the exceptionally high power requirements of the heating elements.*

6. Press and hold the ⏻ button until you hear the UPS beep (approximately two seconds).

   The ∼ indicator illuminates indicating that power is available to your equipment. The UPS conducts a self-test and enters Normal mode.

   If the alarm beeps or a UPS alarm indicator stays on, see Table 10 on page 52.

NOTE *The batteries charge to 90% capacity in approximately 3 hours. However, it is recommended that the batteries charge for 6 to 24 hours after installation or long-term storage.*

UPS Rear Panels

This section shows the rear panels of the Eaton 5115 models.

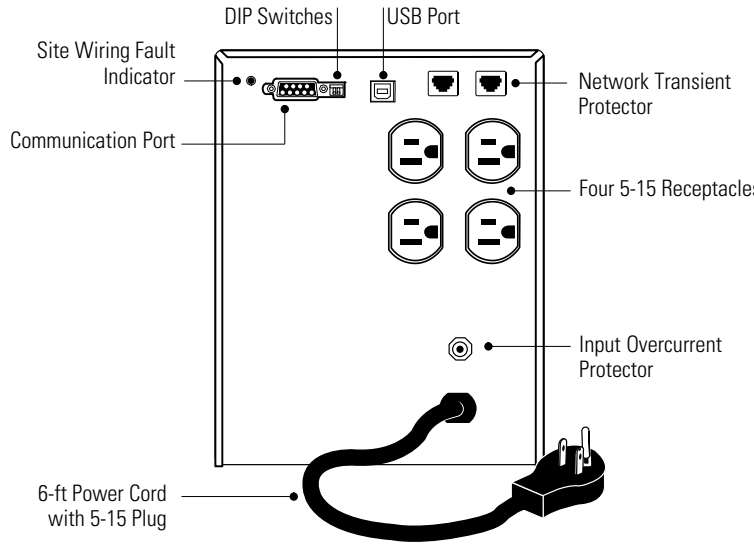

Figure 7. 500 VA, 120V Rear Panel

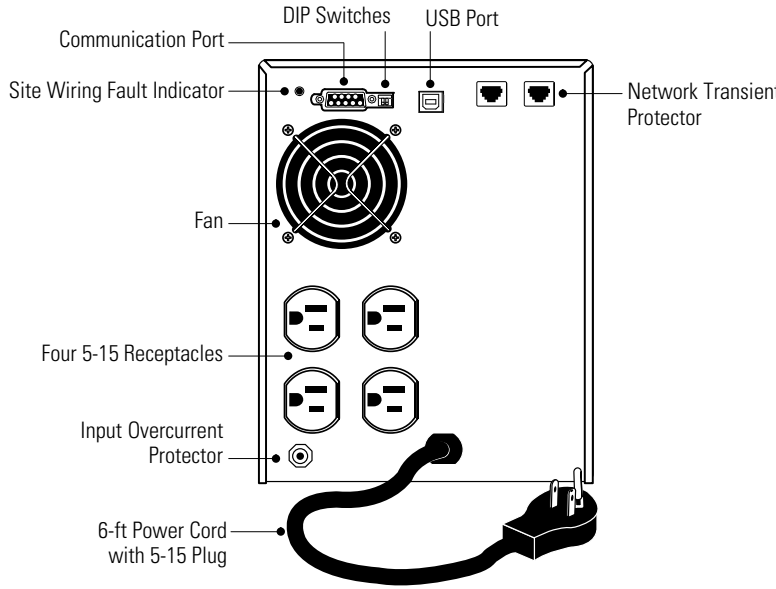

Figure 8. 750 VA, 120V Rear Panel

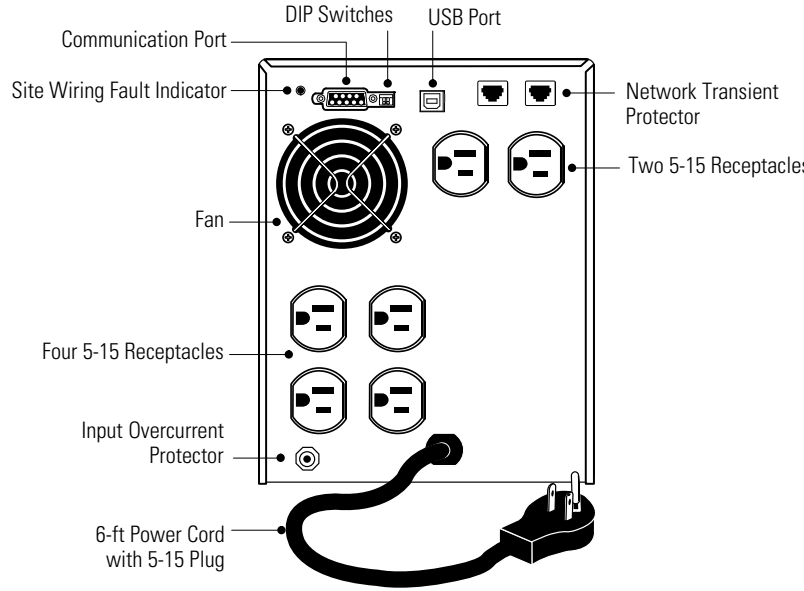

Figure 9. 1000 VA, 120V Rear Panel

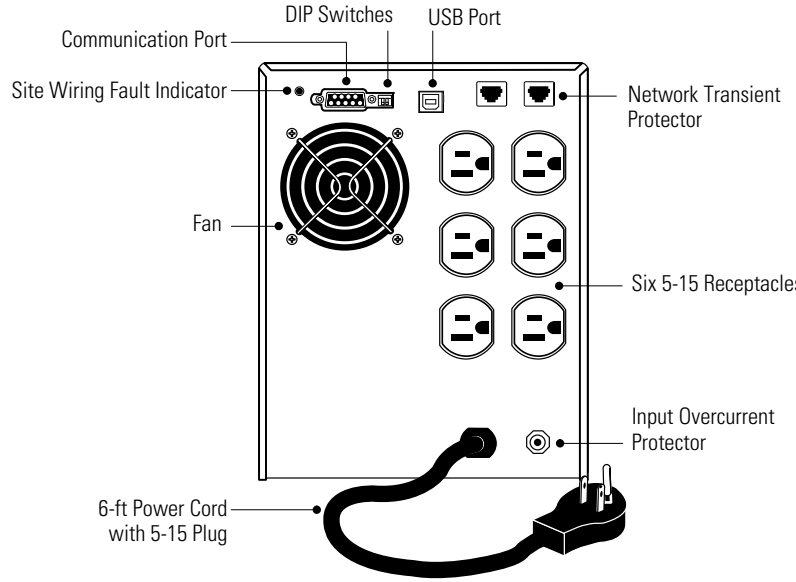

Figure 10. 1400 VA, 120V Rear Panel

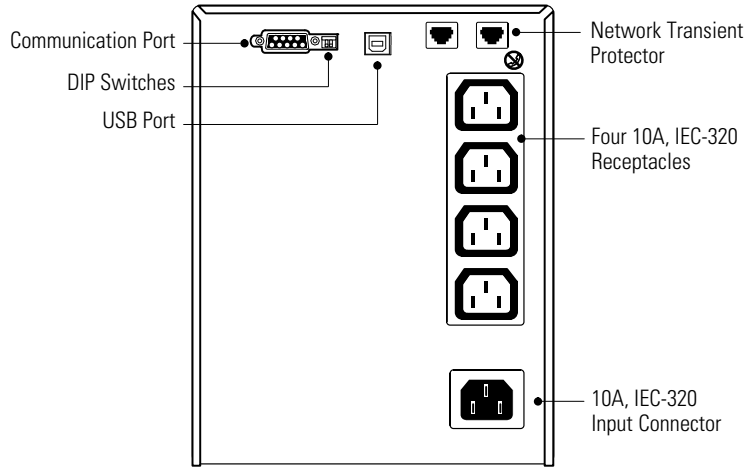

Figure 11. 500 VA, 230V Rear Panel

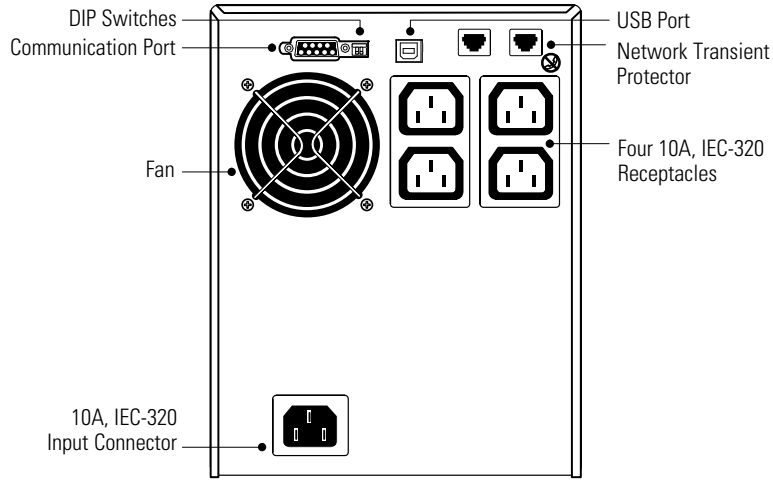

Figure 12. 750 VA, 230V Rear Panel

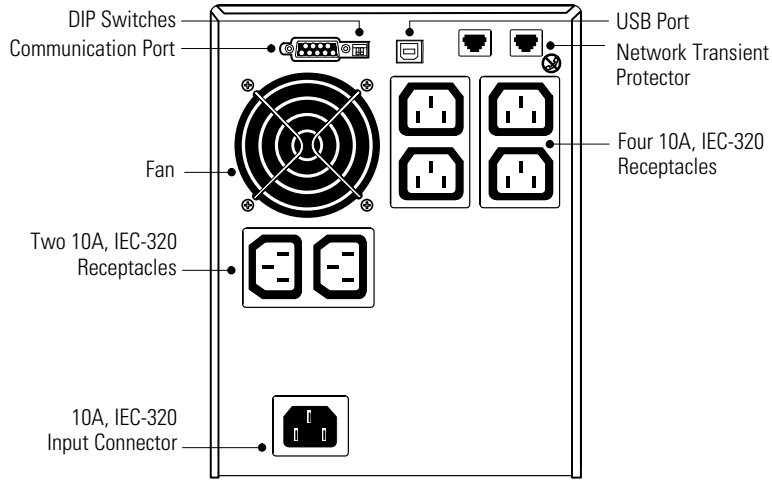

Figure 13. 1000 VA, 230V Rear Panel

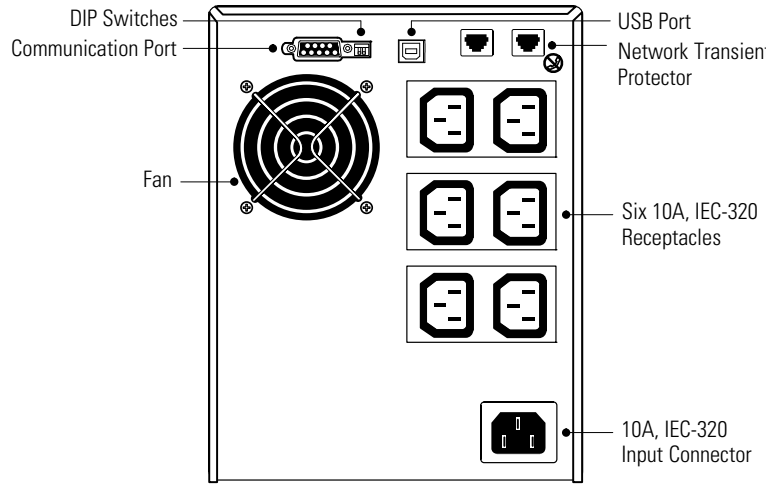

Figure 14. 1400 VA, 230V Rear Panel

Chapter 4 Operation

This section describes:

- Turning the UPS on and off
- Starting the UPS on battery
- Standby mode
- The UPS front panel and indicators
- Initiating the self-test

Turning the UPS On

After the UPS is connected to a power outlet, the UPS enters Standby mode.

To turn on the UPS, press and hold the ⏻ button until you hear the UPS beep (approximately two seconds). After the UPS is turned on, it conducts a self-test and enters Normal mode. The ∼ indicator illuminates solid indicating that power is available to your equipment.

Starting the UPS on Battery

NOTE *The UPS does not auto-detect the input frequency when starting on battery; the default is the last frequency used by the UPS.*

To turn on the UPS without using utility power, press and hold the ⏻ button for two seconds. The UPS starts up in Battery mode and supplies battery power to your equipment. When the UPS starts on battery, it does not conduct a self-test to conserve battery power.

Turning the UPS Off

NOTE *Pressing the ⏻ button while the UPS is in Battery mode causes the UPS to shut down immediately.*

To turn off the UPS:

1. Prepare your equipment for shutdown.
2. Press and hold the ⏻ button for two seconds. The UPS transfers to Standby mode (if utility power is available) and removes power from your equipment.
3. Unplug the UPS from the power outlet.

   If you do not unplug the UPS, it remains in Standby mode.

Standby Mode

When the UPS is turned off and remains plugged into a power outlet, the UPS is in Standby mode. All indicators are off, and power is not available to your equipment. The battery recharges when necessary.

NOTE *For 220–240V models, the output receptacles may remain electrically live (up to 110–120V). Unplug the UPS to ensure power is not available to the output receptacles.*

UPS Front Panel

The UPS front panel indicates the UPS status and also identifies potential power problems. Figure 15 shows the UPS front panel indicators and controls.

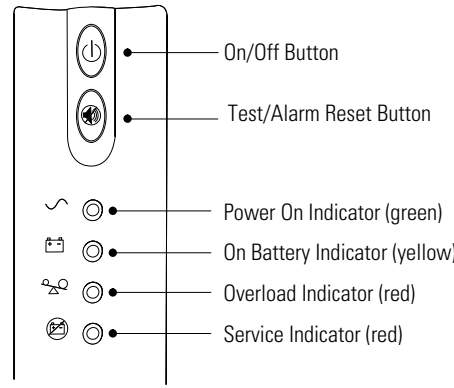

Figure 15. UPS Front Panel

If the alarm beeps or a UPS alarm indicator stays on, see Table 10 on page 52 to identify and correct the problem.

Initiating the Self-Test

NOTE *The batteries must be fully charged and the UPS must not be in Battery mode to perform the self-test.*

Press and hold the button for three seconds to initiate the self-test. During the five-second test, the bar graph indicators cycle through twice. If the alarm beeps or a UPS alarm indicator stays on, see "Troubleshooting" on page 51.

Chapter 5 Additional UPS Features

This section describes:

- Voltage configuration
- USB and DB-9 communication ports
- Network transient protector

Voltage Configuration

The DIP switches on the rear panel of each unit (see Figure 16) are used to configure the output voltage and input voltage range.

To configure voltage:

1. The UPS must be completely shutdown.

   To turn off the UPS, press and hold the ⏻ button for two seconds and then unplug the UPS from the power outlet.

2. Set the DIP switches according to the configurations in Table 1.

3. Plug the UPS power cord into a power outlet.

4. Press and hold the ⏻ button until you hear the UPS beep (approximately two seconds) to turn the UPS on.

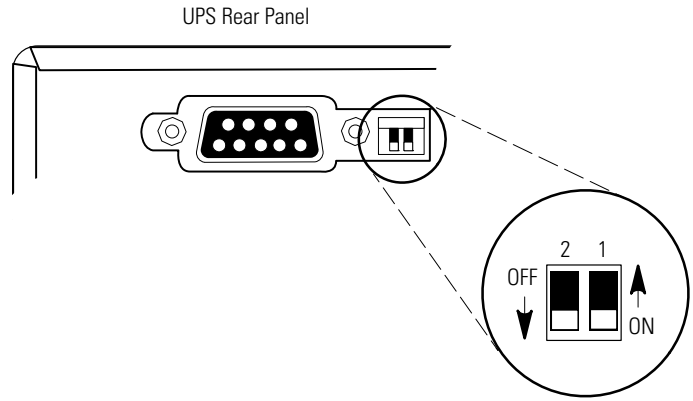

Figure 16. DIP Switches

Table 1. DIP Switch Settings

120V Models			
Output Voltage	Input Voltage Range	DIP Switch 1	DIP Switch 2
110V	99V-116V	ON	OFF or ON
120V*	108V–127V*	OFF	OFF or ON
230V Models			
Output Voltage	Input Voltage Range	DIP Switch 1	DIP Switch 2
220V	198V–233V	ON	OFF
230V*	207V–243V*	OFF	OFF or ON
240V	216V–254V	ON	ON

* Default position

Communication Options

The UPS is equipped with a USB port and a DB-9 communication port. Either the USB port or the DB-9 communication port may be used to monitor the UPS; however, they cannot operate simultaneously.

USB Port

The UPS can communicate with a USB-compliant computer using LanSafe® Power Management Software (v5.0.1 or higher).

To establish communication between the UPS and a computer:

1. Connect the USB cable to the USB port on the UPS rear panel.

   Connect the other end of the USB cable to the USB port on your computer.

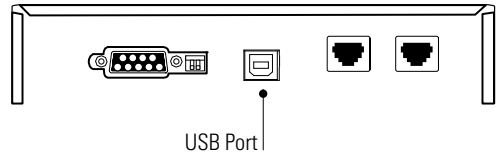

Figure 17. The USB Port

2. Install the LanSafe software and USB drivers according to the instructions provided with the Software Suite CD.

DB-9 Communication Port

To establish communication between the UPS and a computer, connect your computer to the UPS communication port using the supplied communication cable.

When the communication cable is installed, power management software can exchange data with the UPS. The software polls the UPS for detailed information on the status of the power environment. If a power emergency occurs, the software initiates the saving of all data and an orderly shutdown of the equipment.

The cable pins are identified in Figure 18 and the pin functions are described in Table 2.

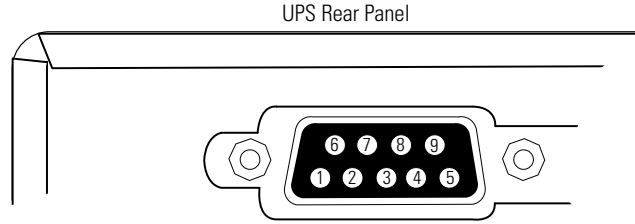

Figure 18. Communication Port

Table 2. Communication Port Pin Assignment

Pin Number	Signal Name	Function	Direction from the UPS
1	Low Batt	Low Battery relay contact; 20 mA, 30 Vdc contact rating	Out
2	TxD	Transmit to external device	Out
3	RxD	Receive from external device	In
4	DTR	PnP (Plug and Play) from external device (tied to Pin 6)	In
5	GND	Signal common (tied to chassis)	—
6	DSR	To external device (tied to Pin 4)	Out
7	—	No Connection	—
8	AC Fail	AC Fail relay contact; 20 mA, 30 Vdc contact rating	Out
9	Power Source	+V (8 to 24 volts DC power)	Out

Network Transient Protector

The network transient protector, shown in Figure 19, is located on the rear panel and has jacks labeled IN and OUT. This feature accommodates a single RJ-45 (10BaseT) network connector.

Low voltage models can also accommodate an RJ-11 telephone connector that provides protection for modems, fax machines, or other telecommunications equipment. As with most modem equipment, it is not advisable to use this jack in digital PBX (Private Branch Exchange) environments.

NOTE *DO NOT connect any telephone or fax/modem equipment (RJ-11) to the 230V models; only connect network cables (RJ-45) to the 230V models.*

1. Connect the input connector of the equipment you are protecting to the jack labeled IN.
2. Connect the network or telephone (low voltage models only) cable to the jack labeled OUT.

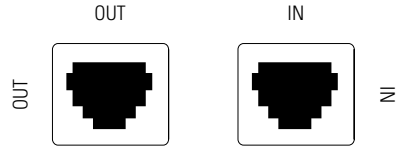

Figure 19. Network Transient Protector

Chapter 6 UPS Maintenance

This section explains how to:

- Care for the UPS and batteries
- Transport the UPS
- Store the UPS and batteries
- Replace the batteries
- Test new batteries
- Recycle used batteries or UPS

UPS and Battery Care

For the best preventive maintenance, keep the area around the UPS clean and dust-free. If the atmosphere is very dusty, clean the outside of the system with a vacuum cleaner.

For full battery life, keep the UPS at an ambient temperature of 25°C (77°F).

NOTE *The batteries in the UPS are rated for a 3–5 year service life. The length of service life varies, depending on the frequency of usage and ambient temperature. Batteries used beyond expected service life will often have severely reduced runtimes. Replace batteries at least every 5 years to keep units running at peak efficiency.*

Transporting the UPS

NOTE *The internal UPS batteries MUST be disconnected.*

If the UPS requires any type of transportation:

1. Verify that the UPS is unplugged and turned off.
2. Disconnect the UPS internal battery connector using the steps in "Connecting the UPS Internal Battery" on page 22 in reverse order.

Storing the UPS and Batteries

If you store the UPS for a long period, recharge the battery every 6 months by plugging the UPS into a power outlet. The batteries charge to 90% capacity in approximately 3 hours. However, it is recommended that the batteries charge for 6 to 24 hours after long-term storage.

Check the battery recharge date on the shipping carton label. If the date has expired and the batteries were never recharged, do not use the UPS. Contact your service representative.

Replacing Batteries

NOTE *DO NOT DISCONNECT the batteries while the UPS is in Battery mode.*

With the hot-swappable battery feature, UPS batteries can be replaced easily without turning the UPS off or disconnecting the load.

If you prefer to remove input power to change the batteries, press and hold the ⏻ button for two seconds and then unplug the UPS.

Consider all warnings, cautions, and notes before replacing batteries.

WARNING

- Batteries can present a risk of electrical shock or burn from high short circuit current. The following precautions must be observed: 1) Remove watches, rings, or other metal objects; 2) Use tools with insulated handles; 3) Do not lay tools or metal parts on top of batteries.
- ELECTRIC ENERGY HAZARD. Do not attempt to alter any battery wiring or connectors. Attempting to alter wiring can cause injury.
- Replace batteries with the same number and type of batteries as originally installed in the UPS.

CAUTION

Pull the battery out onto a flat, stable surface. The battery is unsupported when you pull it out of the UPS.

To replace the UPS internal batteries:

1. Pull the top left corner forward and remove the UPS front cover (see Figure 20).

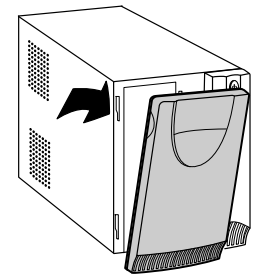

Figure 20. Removing the UPS Front Cover

2. Slide up and remove the metal battery cover (see Figure 21).

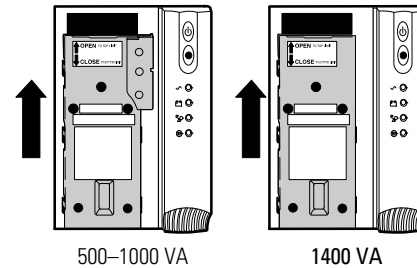

Figure 21. Removing the Battery Cover

500 VA models (see Figure 22):

3. Disconnect the red battery cable
4. Disconnect the black battery cable.
5. Pull the battery out onto a flat, stable surface.
6. Continue to Step 14 on page 44.

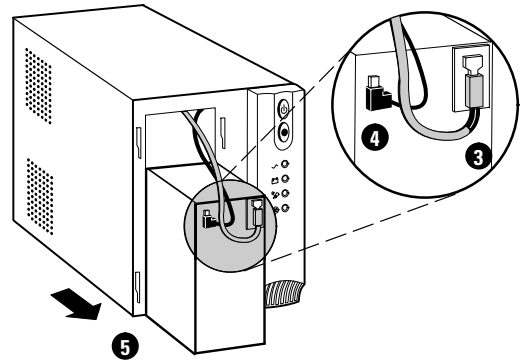

Figure 22. Removing the Battery (500 VA Models)

750/1000 VA models (see Figure 23):

7. Disconnect the red battery cable.

8. Pull the battery out onto a flat, stable surface.

9. Disconnect the black battery cable to the UPS.

10. Continue to Step 14.

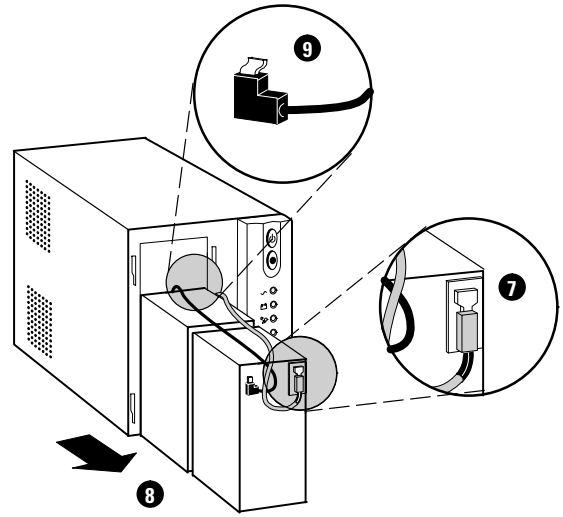

Figure 23. Removing the Battery (750/1000 VA Models)

1400 VA models (see Figure 24:)

11. Disconnect the red battery cable.

12. Pull the battery out onto a flat, stable surface.

13. Disconnect the black battery cable to the UPS.

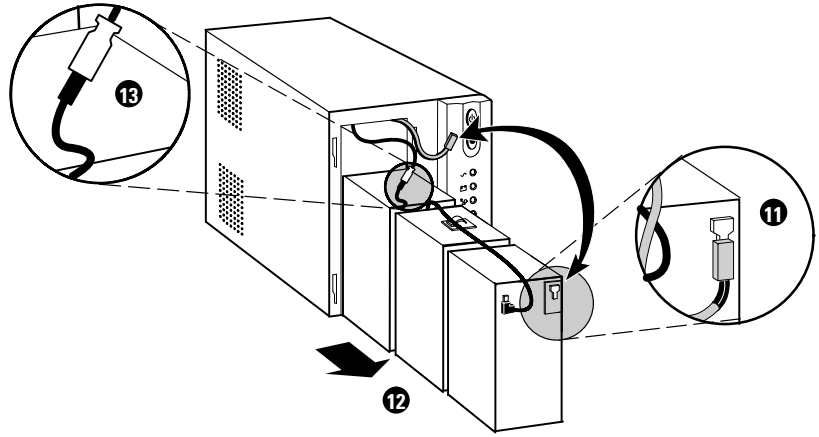

Figure 24. Removing the Battery (1400 VA Models)

14. Replace the battery. See "Recycling the Used Battery or UPS" on page 45 for proper disposal.

15. Place the new batteries in the same position with the battery terminals at the top.

16. Connect the black battery cable to the new battery.

17. Slide the batteries into the UPS. For 1400 VA models, be sure to tuck the black cable connector between the middle and back batteries to prevent damage.

18. Connect the red battery cable.

NOTE *A small amount of arcing may occur when connecting the batteries. This is normal and does not damage the unit or present any safety concern.*

19. Replace the metal battery cover and UPS front cover.

Testing New Batteries

NOTE *Allow batteries to charge for 6 to 24 hours before testing.*

NOTE *The batteries must be fully charged and the UPS must not be in Battery mode to perform the self-test.*

Press and hold the button for three seconds to initiate a self-test. The 15-second test automatically distributes the load to the batteries and tests the battery's performance. While the test is in progress, the indicators cycle through and the alarm sounds. When complete, the UPS returns to Normal mode as indicated by the ~ indicator.

If there is a problem with the battery, the alarm beeps, the + − indicator illuminates and the indicator flashes. Check the battery connections and be sure the battery is fully charged. Call your service representative if the problem persists.

Recycling the Used Battery or UPS

Contact your local recycling or hazardous waste center for information on proper disposal of the used battery or UPS.

WARNING

- Do not dispose of the battery or batteries in a fire. Batteries may explode. Proper disposal of batteries is required. Refer to your local codes for disposal requirements.
- Do not open or mutilate the battery or batteries. Released electrolyte is harmful to the skin and eyes. It may be toxic.

CAUTION

Do not discard the UPS or the UPS batteries in the trash. This product contains sealed, lead-acid batteries and must be disposed of properly. For more information, contact your local recycling/reuse or hazardous waste center.

CAUTION

Do not discard waste electrical or electronic equipment (WEEE) in the trash. For proper disposal, contact your local recycling/reuse or hazardous waste center.

Chapter 7 Specifications

This section provides the following specifications:

- Model list
- Dimensions and weights
- Electrical input and output
- Environmental and safety
- Battery

Table 3. Model List

	120V Models	230V Models
UPS Models	PW5115 500 USB PW5115 750 USB PW5115 1000 USB PW5115 1400 USB	PW5115 500i USB PW5115 750i USB PW5115 1000i USB PW5115 1400i USB

Table 4. Dimensions and Weights

	120V Models	230V Models
UPS Dimensions (W × H × D)	500 VA: 15.0 × 19.3 × 27.0 cm (5.9″ × 7.6″ × 10.6″) 750–1000 VA: 15.0 × 19.3 × 33.5 cm (5.9″ × 7.6″ × 13.2″) 1400 VA: 15.0 × 19.3 × 39.0 cm (5.9″ × 7.6″ × 15.4″)	
UPS Weights	500 VA: 7.8 kg (17.2 lb) 750 VA: 12.4 kg (27.3 lb) 1000 VA: 12.6 kg (27.8 lb) 1400 VA: 16.8 kg (37.0 lb)	

Table 5. Electrical Input

	120V Models	230V Models
Nominal Voltage	110V, 120V selectable	220V, 230V, 240V selectable
Voltage Range	±20% for nominal voltage at full load	
Nominal Frequency	45–65 Hz, 50/60 Hz auto-sensing	
Efficiency (Normal mode)	95%	
Noise Filtering	Full-time EMI/RFI filtering	
Overcurrent Protection	Resettable input overcurrent protector	N/A
Connections	6-ft, 5-15P power cord (90° angle)	10A, IEC-320 input connector

Table 6. Electrical Output

	120V Models	230V Models
Power Levels (rated at nominal inputs)	500 VA, 320W 750 VA, 500W 1000 VA, 670W 1400 VA, 950W	
Power Factor	500 VA, 0.64 750–1400 VA, 0.67	
Regulation (Normal mode)	-10% to +6% of nominal voltage	
Regulation (Battery mode), Nominal Voltage ±5%	Same as selected nominal input voltage 110V, 120V	Same as selected nominal input voltage 220V, 230V, 240V
Voltage Waveform	Sine wave	
Overcurrent Protection	Inverter saturation current limited	
Output Receptacles	500–750 VA: (4) 5-15 1000–1400 VA: (6) 5-15	500–750 VA: (4) 10A, IEC-320 1000–1400 VA: (6) 10A, IEC-320

Table 7. Environmental and Safety

	120V Models	230V Models
Operating Temperature	Up to 1,500 meters: 0°C to 40°C (32°F to 104°F); UL tested 25°C (77°F) Above 1,500 meters: 0°C to 35°C (32°F to 95°F)	
Transit/Storage Temperature	-15°C to 55°C (5°F to 131°F)	
Relative Humidity	5–95% noncondensing	
Operating Altitude	Up to 3,000 meters above sea level	
Audible Noise	Less than 45 dBA typical	
Surge Suppression	ANSI C62.41 Category A (formerly IEEE 587)	
Safety Conformance	UL 1778 2nd Edition; UL 497A; CSA C22.2, No. 107.1	UL 1778 2nd Edition, UL 497A (data line only); CSA C22.2, No. 107.1; IEC/EN 62040-1-1 and IEC/EN 60950
Safety Markings	cULcs, cUL	cULcs, cUL, CE, TÜV, C-Tick
EMC (Class B)	FCC Part 15, ICES-003	IEC/EN 62040-2, FCC Part 15, ICES-003

Table 8. Battery

UPS Configuration	500 VA: (1) 12V, 9 Ah internal battery 750 VA: (2) 12V, 7 or 7.2 Ah internal batteries 1000 VA: (2) 12V, 9 Ah internal batteries 1400 VA: (3) 12V, 9 Ah internal batteries
Voltage	500 VA: 12 Vdc 750–1000 VA: 24 Vdc 1400 VA: 36 Vdc
Type	Sealed, maintenance-free, valve-regulated, lead-acid
Charging	Advanced charging for faster recovery; approximately 3 hours to 90% usable capacity at nominal line and no supplementary power supply load
Monitoring	Advanced monitoring for earlier failure detection and warning

Table 9. Battery Runtimes (in Minutes)

		UPS Models by VA Ratings			
Load (VA)	**Watts**	**500**	**750**	**1000**	**1400**
200	128	17	38	41	58
300	192	11	27	28	41
500	320	5	14	15	28
600	402		9	10	19
750	503		6	8	14
900	603			6	10
1000	670			5	8
1200	804				6
1400	938				5

NOTE Battery times are approximate and may vary depending on the load configuration and battery charge.

Chapter 8 Troubleshooting

This section explains:

- UPS alarms and conditions
- How to silence an alarm
- Site wiring fault (120V models only)
- Service and support

Audible Alarms and UPS Conditions

The UPS has an audible alarm feature to alert you of potential power problems. Use Table 10 to determine and resolve the UPS alarms and conditions.

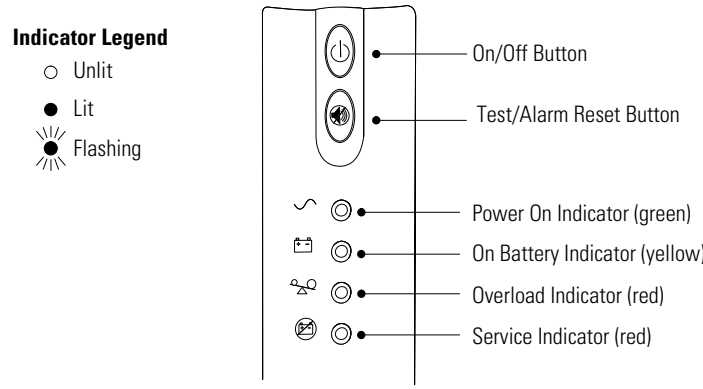

Figure 25. UPS Front Panel

Silencing an Audible Alarm

Before silencing an alarm, check the alarm condition and perform the applicable action to resolve the condition (see Table 10).

To silence the alarm for an existing fault, press the button. If UPS status changes, the alarm beeps, overriding the previous alarm silencing.

The alarm does not silence if there is a UPS fault, low battery condition, or if the battery needs to be replaced.

Site Wiring Fault (120V Models Only)

The Site Wiring Fault indicator on the UPS rear panel illuminates if the ground wire connection does not exist or the line and neutral wires are reversed in the line receptacle. This indicator stays on until the condition is resolved. Have a qualified electrician correct the wiring fault. The UPS operates when the indicator is illuminated, but does not provide rated noise and surge suppression.

Table 10. Troubleshooting Guide

Alarm or Condition	Possible Cause	Action
The ~ indicator is not on; the UPS does not start.	The power cord is not connected correctly.	Check the power cord connections.
	The UPS is in Standby mode.	Press and hold the ⏻ button until you hear the UPS beep (approximately two seconds) to supply power to the connected equipment.
	The wall outlet is faulty.	Have a qualified electrician test and repair the outlet.
The UPS operates in Battery mode only, even though normal utility power is present.	The input overcurrent protector is open (120V models only).	Save your work and turn off your equipment. Turn off the UPS. Reduce the load, then press the input overcurrent protector on the UPS rear panel.
The UPS does not provide the expected backup time.	The batteries need charging or service.	Plug the UPS into a power outlet for 24 hours to charge the battery. Press the 🔊 button. If the alarm beeps, see “Replacing Batteries” on page 40 to replace the battery. During an extended power outage, save your work and turn off your equipment to conserve battery power.
~ ●	Normal operation.	None. The UPS is operating in Normal mode and automatically provides consistent voltage with the Buck and Boost feature.
🔋 ● 1 beep every 4 seconds.	The UPS is on battery due to a utility failure.	The UPS is powering your equipment with battery power. Prepare your equipment for shutdown. During an extended power outage, save your work and turn off your equipment to conserve battery power.
🔋 ● 1 beep every 2 seconds.	The battery is running low.	Two minutes or less of battery power remains (depending on load configuration and battery charge). Save your work and turn off your equipment. The alarm cannot be silenced.

Table 10. Troubleshooting Guide (continued)

Alarm or Condition	Possible Cause	Action
1 beep every 4 seconds.	The UPS is running on battery power because the input voltage is too high or too low.	Correct the input voltage, if possible. The UPS continues to operate on battery until the condition is corrected or the battery is completely discharged. If the condition persists, the input voltage in your area may differ from the UPS nominal. Change the UPS input voltage to match your local voltage (see "Voltage Configuration" on page 35).
1 beep per second.	Power requirements exceed UPS capacity (overload is greater than 120%) or the load is defective.	The UPS automatically shuts down in 3 minutes. Save your work immediately and turn off your equipment. Turn off the UPS. Remove some of the equipment from the UPS. You may need to obtain a larger capacity UPS.
1 beep per second.	The UPS is on battery, and the power requirements exceed UPS capacity (overload is greater than 120%) or the load is defective.	Shutdown is imminent (30 seconds). Save your work and turn off your equipment. Turn off and unplug the UPS. Remove some of the equipment from the UPS. Wait at least 5 seconds until all LEDs are off, and then restart the UPS. You may need to obtain a larger capacity UPS.
Continuous beep.	Battery test failed.	Check the battery connections and be sure the battery is fully charged. If the indicator still flashes, see "Replacing Batteries" on page 40. Call your service representative if the problem persists.
Continuous beep.	UPS internal temperature is too high.	Shutdown is imminent. Save your work and turn off your equipment. Turn off the UPS. Clear vents and remove any heat sources. Ensure the airflow around the UPS is not restricted. Wait at least 5 minutes, and then restart the UPS. If the condition persists, contact your service representative.
Continuous beep.	UPS fan fault (750–1400 VA models only).	Save your work and turn off your equipment. Turn off the UPS. Contact your service representative.

Table 10. Troubleshooting Guide (continued)

Alarm or Condition	Possible Cause	Action
3 beeps every 10 seconds.	Failed attempt to start the UPS on battery.	Plug the UPS into a power outlet for 24 hours to charge the battery. After charging the battery, press and hold the button for 3 seconds; then check the indicator. If the indicator still flashes, see “Replacing Batteries” on page 40.
Continuous beep.	The output wave is abnormal while the UPS is on battery.	Shutdown is imminent. Save your work and turn off your equipment. Turn off the UPS. Contact your service representative.
Continuous beep.	The output voltage is below or above the limit while the UPS is on battery.	Save your work and turn off your equipment. Turn off the UPS. Contact your service representative.

Service and Support

If you have any questions or problems with the UPS, call your **Local Distributor** or the **Help Desk** at one of the following telephone numbers and ask for a UPS technical representative.

United States:	1-800-356-5737
Canada:	1-800-461-9166 ext 260
All other countries:	Call your local service representative

Please have the following information ready when you call the Help Desk:

- Model number
- Serial number
- Version number (if available)
- Date of failure or problem
- Symptoms of failure or problem
- Customer return address and contact information

If repair is required, you will be given a Returned Material Authorization (RMA) Number. This number must appear on the outside of the package and on the Bill Of Lading (if applicable). Use the original packaging or request packaging from the Help Desk or distributor. Units damaged in shipment as a result of improper packaging are not covered under warranty. A replacement or repair unit will be shipped, freight prepaid for all warrantied units.

NOTE *For critical applications, immediate replacement may be available. Call the* ***Help Desk*** *for the dealer or distributor nearest you.*

Chapter 9 Warranty

Two-Year Limited Warranty with Extension to Three-Year Limited Warranty (US and Canada)

Eaton UPS Models: 3105, 5110, 5115, 5125, and 5130

WARRANTOR: The warrantor for the limited warranties set forth herein is Eaton Corporation, an Ohio Corporation company ("Company").

LIMITED WARRANTY: This limited warranty (this "Warranty") applies only to the original End-User (the "End-User") of any Eaton 3105, 5110, 5115, 5125, and 5130 Products (individually and collectively, the "Product") purchased on or after August 19, 2009 and cannot be transferred. This Warranty applies even in the event that the Product is initially sold by Company for resale to an End-User.

LIMITED WARRANTY PERIOD: The period covered by this Warranty for Product installed [and currently located] in the fifty (50) United States, the District of Columbia, and Canada is twenty-four (24) months from the date of purchase, or thirty (30) months from the date of shipment. For units which are registered online at www.eaton.com/PQ/Register, the warranty is extended to thirty-six (36) months from the date of purchase, or forty-two (42) months from the date of shipment.

WHAT THIS LIMITED WARRANTY COVERS: The warrantor warrants that the Product and battery (individually and collectively, the "Warranted Items") are free from defects in material and workmanship. If, in the opinion of Company, a Warranted Item is defective and the defect is within the terms of this Warranty, Company's sole obligation will be to repair or replace such defective Warranted Item (including by providing service, parts and labor, as applicable), at the option of Company.

PROCEDURES FOR REPAIR OR REPLACEMENT OF WARRANTED ITEMS: The Warranted Item will be repaired or replaced at a Company site or such other location as determined by Company.

If the Warranted Item is to be replaced by Company, and the End-User supplies a credit card number or purchase order for the value of the replacement Product, Company will use commercially reasonable business efforts to ship (via standard ground shipment and at no cost to the End-User) the replacement Warranted Item to the End-User within one (1) business day after Company receives notice of the warranty claim. In such case, the End-User must return (at Company's expense) the defective Warranted Item to Company in the same packaging as the replacement Warranted Item received by the End-User or as otherwise instructed by Company. If Company does not receive the defective Warranted Item, Company will either charge the End-User's credit card, or send the End-User an invoice (which the End-User agrees to pay), for the value of the replacement Product.

If the Warranted Item is to be replaced by Company, but the End-User is unwilling or unable to supply a credit card number or purchase order for the value of the replacement Product, Company will use commercially reasonable business efforts to ship (via standard ground shipment and at no cost to the End-User) the replacement Warranted Item to the End-User within one (1) business day after Company receives the defective Product from the End-User.

In any case, Company will provide shipping instructions and will pay its designated carrier for all shipping charges for return of defective equipment and replacement of Warranted Items. Any returned Warranted Item or parts that are replaced may be new or reconditioned. All Warranted Items returned to Company and all parts replaced by Company shall become the property of Company.

WHAT THIS LIMITED WARRANTY DOES NOT COVER: This Warranty does not cover any defects or damages caused by: (a) failure to properly store the Product before installation, including the charge of batteries no later than the date indicated on the packaging; (b) shipping and delivery of the Product if shipping is FOB Factory; (c) neglect, accident, abuse, misuse, misapplication, or incorrect installation; (d) repair or alteration not authorized in writing by Company personnel or performed by an authorized Company Customer Service Engineer or Agent; (e) improper testing, operation, maintenance, adjustment, or modification of any kind not authorized in writing by Company personnel or performed by an authorized Company Customer Service Engineer or Agent; or (f) use of the Product under other than normal operating conditions or in a manner inconsistent with the Product's labels or instructions.

This Warranty is not valid if the Product's serial numbers have been removed or are illegible. Any Warranted Items repaired or replaced pursuant to this Warranty will be warranted for the remaining portion of the original Warranty subject to all the terms thereof.

Company shall not be responsible for any charges for testing, checking, removal, or installation of Warranted Items.

COMPANY DOES NOT WARRANT EQUIPMENT NOT MANUFACTURED BY COMPANY. IF PERMITTED BY THE APPLICABLE MANUFACTURER, COMPANY SHALL PASS THROUGH SUCH MANUFACTURER'S WARRANTIES TO END-USER.

COMPANY DOES NOT WARRANT SOFTWARE, INCLUDING SOFTWARE EMBEDDED IN PRODUCTS, THAT IS NOT CREATED BY COMPANY. WITHOUT LIMITING THE FOREGOING, COMPANY SPECIFICALLY DOES NOT WARRANT SOFTWARE (SUCH AS LINUX) THAT WAS CREATED USING AN “OPEN SOURCE” MODEL OR IS DISTRIBUTED PURSUANT TO AN OPEN SOURCE LICENSE.

THIS WARRANTY IS THE SOLE AND EXCLUSIVE WARRANTY OFFERED BY COMPANY WITH RESPECT TO THE PRODUCTS AND SERVICES AND, EXCEPT FOR SUCH FOREGOING WARRANTY COMPANY DISCLAIMS ALL OTHER WARRANTIES INCLUDING BUT NOT LIMITED TO ANY IMPLIED WARRANTIES OF MERCHANTABILITY, TITLE, NON-INFRINGEMENT, AND FITNESS FOR A PARTICULAR PURPOSE. CORRECTION OF NON-CONFORMITIES IN THE MANNER AND FOR THE PERIOD OF TIME PROVIDED ABOVE SHALL CONSTITUTE COMPANY'S SOLE LIABILITY AND END-USER'S EXCLUSIVE REMEDY FOR FAILURE OF COMPANY TO MEET ITS WARRANTY OBLIGATIONS, WHETHER CLAIMS OF THE END-USER ARE BASED IN CONTRACT, IN TORT (INCLUDING NEGLIGENCE OR STRICT LIABILITY), OR OTHERWISE.

LIMITATION OF LIABILITY: The remedies of the End-User set forth herein are exclusive and are the sole remedies for any failure of Company to comply with its obligations hereunder. In no event shall Company be liable in contract, in tort (including negligence or strict liability) or otherwise for damage to property or equipment other than the Products, including loss of profits or revenue, loss of use of Products, loss of data, cost of capital, claims of customers of the End-User, or any special, indirect, incidental, or consequential damages whatsoever. The total cumulative liability of Company hereunder whether the claims are based in contract (including indemnity), in tort (including negligence or strict liability), or otherwise, shall not exceed the price of the Product on which such liability is based.

Company shall not be responsible for failure to provide service or parts due to causes beyond Company's reasonable control.

END-USER'S OBLIGATIONS: In order to receive the benefits of this Warranty, the End-User must use the Product in a normal way; follow the Product's user's guide; and protect against further damage to the Product if there is a covered defect.

OTHER LIMITATIONS: Company's obligations under this Warranty are expressly conditioned upon receipt by Company of all payments due to it (including interest charges, if any). During such time as Company has not received payment of any amount due to it for the Product, in accordance with the contract terms under which the Product is sold, Company shall have no obligation under this Warranty. Also during such time, the period of this Warranty shall continue to run and the expiration of this Warranty shall not be extended upon payment of any overdue or unpaid amounts.

COSTS NOT RELATED TO WARRANTY: The End-User shall be invoiced for, and shall pay for, all services not expressly provided for by the terms of this Warranty, including without limitation, site calls involving an inspection that determines no corrective maintenance is required. Any costs for replacement equipment, installation, materials, freight charges, travel expenses, or labor of Company representatives outside the terms of this Warranty will be borne by the End-User.

OBTAINING WARRANTY SERVICE: In the USA, call the Customer Reliability Center 7x24 at 800-356-5737. Outside of the USA, call your local Eaton product sales or service representative. For comments or questions about this Warranty, write to the Customer Quality Representative, 3301 Spring Forest Road, Raleigh, North Carolina 27616 USA.

Load Protection Guarantee (US and Canada)

Eaton UPS Models 3105, 5110, 5115, 5125, and 5130

GUARANTOR: The Guarantor for the load protection guaranty set forth herein is Eaton Corporation, an Ohio Corporation company ("Company").

LIMITED GUARANTY: This load protection guaranty (this "Guaranty") applies only to the original End-User (the "End-User") of any Eaton 3105, 5110, 5115, 5125, and 5130 Products (individually and collectively, the "Product") and cannot be transferred. This Guaranty applies even in the event that the Product is initially sold by Company for resale to an End-User.

WHAT THIS GUARANTY COVERS: For the lifetime of the Product, Guarantor promises to repair or replace, at Guarantor's option, the equipment (valued up to the limits shown below*) that is damaged by an AC power line surge, spike, or other transient when properly connected to Guarantor's uninterruptible power system ("UPS"). Reimbursement for or restoration of data loss excluded. This Guaranty applies only if all of the following circumstances arise:

1. The UPS is plugged into properly grounded and wired outlets, using no extension cords, adapters, other ground wires, or other electrical connectors;
2. The installation of the UPS complies with all applicable electrical and safety codes described by the National Electrical Code® (NEC®);
3. The UPS was used under normal operating conditions and in accordance with all labels and instructions; and
4. The UPS was not damaged by accident (other than AC power line transient), misuse, or abuse.

*Cumulative Limits to be paid by Guarantor under this Load Protection Guaranty:

- $25,000 for Eaton UPS Model 3105
- $150,000 for Eaton UPS Models 5110, 5115, 5125, and 5130

WHAT THIS GUARANTY DOES NOT COVER: Any reimbursement or repair to End-User's equipment does not include reimbursement for or restoration of any data loss. This Guaranty does not cover any defects or damages caused by: (a) failure to properly store the Product before installation, including the charge of batteries no later than the date indicated on the packaging; (b) shipping and delivery of the Product if shipping is FOB Factory; (c) neglect, accident, abuse, misuse, misapplication, or incorrect installation of Product; (d) repair or alteration of Product not authorized in writing by Company personnel or performed by an authorized Company Customer Service Engineer or Agent; (e) improper testing, operation, maintenance, adjustment, or modification of any kind to the Product not authorized in writing by Company personnel or performed by an authorized Company Customer Service Engineer or Agent; or (f) use of the Product under other than normal operating conditions or in a manner inconsistent with the Product's labels or instructions.

This Guaranty is not valid: (a) unless the End-User returns to Company the Warranty Registration Card or completes the registration form on www.eaton.com/PQ/Register within thirty (30) days of purchase; or (b) if the Product's serial numbers have been removed or are illegible.

Company shall not be responsible for any charges for testing, checking, removal, or installation of any items.

LIMITATION OF LIABILITY: THE REMEDIES OF THE END-USER SET FORTH HEREIN ARE EXCLUSIVE AND ARE THE SOLE REMEDIES FOR ANY FAILURE OF COMPANY TO COMPLY WITH ITS OBLIGATIONS HEREUNDER. EXCEPT AS OTHERWISE PROVIDED FOR IN THIS GUARANTY, IN NO EVENT SHALL COMPANY BE LIABLE IN CONTRACT, IN TORT (INCLUDING NEGLIGENCE OR STRICT LIABILITY), OR OTHERWISE FOR DAMAGE TO PROPERTY OR EQUIPMENT OTHER THAN THE PRODUCTS, INCLUDING LOSS OF PROFITS OR REVENUE, LOSS OF USE OF PRODUCTS, LOSS OF DATA, COST OF CAPITAL, CLAIMS OF CUSTOMERS OF THE END-USER OR ANY SPECIAL, INDIRECT, INCIDENTAL, OR CONSEQUENTIAL DAMAGES WHATSOEVER. THE TOTAL CUMULATIVE LIABILITY OF COMPANY HEREUNDER WHETHER THE CLAIMS ARE BASED IN CONTRACT (INCLUDING INDEMNITY), IN TORT (INCLUDING NEGLIGENCE OR STRICT LIABILITY), OR OTHERWISE, SHALL NOT EXCEED THOSE SET FORTH ABOVE.

Company shall not be responsible for failure to provide repair or replacement under this Guaranty due to causes beyond Company's reasonable control.

END-USER'S OBLIGATIONS: In order to receive the benefits of this Guaranty, the End-User must use the Product in a normal way; follow the Product's user's guide; and protect against further damage to the Product if there is a covered defect.

OTHER LIMITATIONS: Company's obligations under this Guaranty are expressly conditioned upon receipt by Company of all payments due to it (including interest charges, if any). During such time as Company has not received payment of any amount due to it for the Product, in accordance with the contract terms under which the Product is sold, Company shall have no obligation under this Guaranty.

COSTS NOT RELATED TO GUARANTY: The End-User shall be invoiced for, and shall pay for, all services not expressly provided for by the terms of this Guaranty, including without limitation, site calls involving an inspection that determines no corrective maintenance is required. Any costs for replacement equipment, installation, materials, freight charges, travel expenses, or labor of Company representatives outside the terms of this Guaranty will be borne by the End-User.

TO MAKE A CLAIM: In the USA, call the Customer Reliability Center 7x24 at 800-356-5737. Outside of the USA, contact your local Eaton product sales or service representative. For comments or questions about this Load Protection Guaranty, write to the Customer Quality Representative, 3301 Spring Forest Road, Raleigh, North Carolina 27616 USA.